Dane aktualne na dzień: 27-11-2026 09:53

Link do produktu: https://www.iba24.pl/karcher-oring-o-ring-6x2-oryginal-p-989.html



KARCHER oring O-Ring 6x2 oryginał

Cena	**5,50 zł**
Czas wysyłki	**24 godziny**
Numer katalogowy	**6.362-113.0**
Kod producenta	**6.362-113.0**
Kod EAN	**4002667181043**
Marka	**Kärcher**
Waga produktu z opakowaniem jednostkowym	**0.01 kg**
Pasuje do modelu	**do wylotu wody kolanka, myjki KARCHER K2 K3 ORYGINAŁ, Uszczelka o-Ring 6x2**
EAN (GTIN)	**4002667181043**
Rodzaj	**uszczelka**
Pasuje do marki	**Kärcher**
Kod producenta	**6.362-113.0**

Opis produktu



KARCHER O-Ring 6,0 x 2,0 NBR 70

oraz ssawek do odkurzaczy piorących PUZZI

nr. katalogowy: 6.362-113.0

KOMPATYBILNOŚĆ K2 K3

- **K 3 / K 3 Power Control *EU**
- **K 3 / K 3 Home T350 *EU**
- **K 3 / K 3 Home & Pipe *EU**
- **K 3 / K 3 Full Control Home T150 *EU**
- **K 3 / K 3 Full Control Home T 5 *EU**
- **K 3 / K 3 Full Control Home & Pipe *EU**
- **K 3 / K 3 Full Control Car&Home T150 *EU**
- **K 3 / K 3 Full Control Car *EU**
- **K 3 / K 3 Full Control Brush *EU**
- **K 3 / K 3 Full Control *EU**
- **K 3 / K 3 Compact Home *EU**
- **K 3 / K 3 Compact Car *EU**
- **K 3 / K 3 Compact *EU**
- **K 3 / K 3 Classic Car *EU**
- **K 3 / K 3 Classic *EU**
- **K 3 / K 3 Carry *EU**
- **K 3 / K 3 Car EID-Bundle *EU**
- **K 3 / K 3 Car *EU**

- **K 3 / K 3 Car *EU**
- **K 3 / K 3 Car & Home *EU**
- **K 3 / K 3 *EU**
- **K 2 / KHP 2 Car *EU**
- **K 2 / KHP 2 *EU**
- **K 2 / K 2M T150 & Pipe *EU**
- **K 2 / K 2 *EU**

O-ring pasuje do kolanek wylotów wody do myjek K2 K3





KOMPATYBILNOŚĆ PUZZI :

- **Puzzi 9/1 Bp Pack Adv *EU**
- **Puzzi 9/1 Bp Pack *EU**
- **Puzzi 8/1 Adv *EU**
- **Puzzi 8/1 *EU**
- **Puzzi 8/1 C with hand nozzle *EU**
- **Puzzi 8/1 C with floor nozzle *EU**
- **Puzzi 8/1 C *EU**
- **PUZZI 400 E *EU**
- **Puzzi 30/ 4 E *EU**
- **PUZZI 200 *EU**
- **PUZZI 100 SUPER Sochi *EU**
- **PUZZI 100 SUPER *EU**
- **PUZZI 100 +HAND *EU**
- **Puzzi 10/2 Adv Loxam *EU**
- **Puzzi 10/2 Adv *EU**
- **Puzzi 10/1 Edition *EU**
- **Puzzi 10/1 + Hand *EU**
- **Puzzi 10/1 *EU**

O-ring pasuje do dyszy podłogowej (4.130-008.0) oraz ssawki do tapicerki (4.130-001.0)

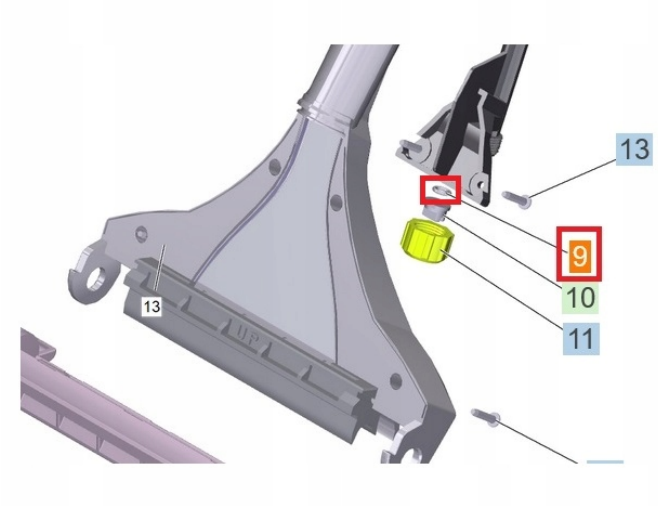
13
9
10
11
13

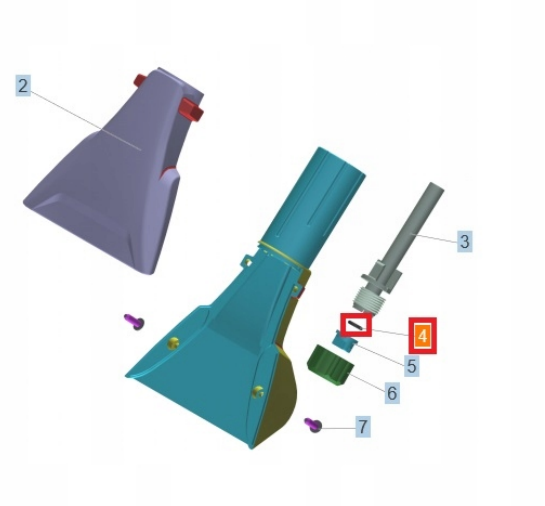
2
3
4
5
6
7