Dane aktualne na dzień: 27-11-2026 12:37

Link do produktu: https://www.iba24.pl/karcher-pierscien-uszczelniajacy-o-ring-do-rurek-doplywu-wody-k-5-k-6-k-7-p-2658.html



KARCHER pierścień uszczelniający o-ring do rurek dopływu wody K 5 K 6 K 7

Cena	**7,00 zł**
Czas wysyłki	**24 godziny**
Numer katalogowy	**6.363-610.0**
Kod producenta	**6.363-610.0**
Kod EAN	**4039784824355**
Marka	**Kärcher**
Seria	**K**
EAN (GTIN)	**4039784824355**
Rodzaj	**inny**
Kod taryfy celnej	**68129990**
Kod producenta	**6.363-610.0**

Opis produktu



KARCHER Pierścień uszczelniający 13 x 3 -NBR

nr. katalogowy: 6.363-610.0

KOMPATYBILNOŚĆ K5 K6 K7:

- **K 7 / K 750MX-WB *EU**
- **K 7 / K 750MX-PL RWB*EUR**
- **K 7 / K 7.960M PLUS *EU**
- **K 7 / K 7.91 MD T300 *EU**
- **K 7 / K 7.91 MD T300 RS *EU**
- **K 7 / K 7.91 MD *EU**
- **K 7 / K 7.85M-WB *EU**
- **K 7 / K 7.85 M PL WB *EU**
- **K 7 / K 7.85M-4F *EU**
- **K 7 / K 7.85M "SPECIAL"*EU**
- **K 7 / K 7.80M-WB *EU**
- **K 7 / K 7.80MD Plus* EU**
- **K 7 / K 7.80M PL-WB *EU**
- **K 7 / K 7.80M Plus * EU**
- **K 7 / K 7.800 eco!ogic *EU**
- **K 7 / K 7.750 *EU**
- **K 7 / K 7.75 M-pl-WB-T 200 *EU**

- **K 7 / K 7.710 T400 *EU**
- **K 7 / K 7.70MX-4F-WB *EU**
- **K 7 / K 7.700 *EU**
- **K 7 / K 7.650 T400 *EU**
- **K 7 / K 7.650 *EU**
- **K 7 / K 7.560 T400 *EU**
- **K 7 / K 7.560 *EU**
- **K 7 / K 7.50MX -T300 *EU**
- **K 7 / K 7.450 *EU**
- **K 7 / K 7.410 T400 *EU**
- **K 7 / K 7.400 *EU**
- **K 7 / K 7.350 T400 *EU**
- **K 7 / K 7.350 *EU**
- **K 7 / K 7.280 MD Plus *EU**
- **K 7 / K 7.260 T400 *EU**
- **K 7 / K 7.200 T400 *EU**
- **K 7 / K 7.200 *EU**
- **K 7 / K 7 Premium Home & Wood *EU**
- **K 7 / K 7 Premium (2,5kW) *EU**
- **K 7 / K 7 Home *EU**
- **K 7 / K 7 Compact (2,5kW) *EU**
- **K 7 / K 7 Car *EU**
- **K 7 / K 7 *EU**
- **K 7 / K 7 (2,5kW) *EU**
- **K 6 / K 6.91MD-T300 *EU**
- **K 6 / K 6.91MD PLUS -T300*EU**
- **K 6 / K 6.91 MD *EU**
- **K 6 / K 6.85M-WB *EU**
- **K 6 / K 6.85M PLUS WB *EU**
- **K 6 / K 6.85MD PLUS RR T200*EU**
- **K 6 / K 6.80M-WB *EU**
- **K 6 / K 6.80 M PL WB *EU**
- **K 6 / K 6.80M PLUS T250 *EU**
- **K 6 / K 6.800 eco!ogic *EU**
- **K 6 / K 6.80 M PLUS RR T200 *EU**
- **K 6 / K 6.760 T400 *EU**
- **K 6 / K 6.750 *EU**
- **K 6 / K 6.75 M-pl-WB-T 200 *EU**
- **K 6 / K 6.75 Jubilee Plus T400 *EU**
- **K 6 / K 6.75 Jubilee *EU**
- **K 6 / K 6.70M-WB *EU**
- **K 6 / K 6.70MS-PL-WB *EUR**
- **K 6 / K 6.70 M-PL-WB *EU**
- **K 6 / K 6.685 *EU**
- **K 6 / K 6.610 T300 *EU**
- **K 6 / K 6.600 *EU**
- **K 6 / K 6.560 *EU**
- **K 6 / K 6.550 T300 *EU**
- **K 6 / K 6.550 *EU**
- **K 6 / K 6.50M-WB *EUR**
- **K 6 / K 6.50MS-PLUS-WB*EU**
- **K 6 / K 6.50M-PLUS-WB *EU**
- **K 6 / K 6.500 *EU**
- **K 6 / K 6.460 T400 *EU**
- **K 6 / K 6.450 *EU**
- **K 6 / K 6.310 T300 *EU**
- **K 6 / K 6.300 *EU**
- **K 6 / K 6.260 *EU**
- **K 6 / K 6.260 *EU**
- **K 6 / K 6.250 T300 *EU**
- **K 6 / K 6.250 JUBILEE T400 *EU**
- **K 6 / K 6.250 *EU**
- **K 6 / K 6.200 T400 *EU**
- **K 5 / K 5.91MD T250 *EU**
- **K 5 / K 5.91M *EU**
- **K 5 / K 5.80M *EUR**
- **K 5 / K 5.85 M PLUS *EU**
- **K 5 / K 5.85M *EU**
- **K 5 / K 5.85 M Plus *EU**

- **K 5 / K 5.80M-PL-WB *EUR**
- **K 5 / K 5.80M-PLUS *EU**
- **K 5 / K 5.80M-4F *EU**
- **K 5 / K 5.80M PLUS T250 *EU**
- **K 5 / K 5.80 M Plus *EU**

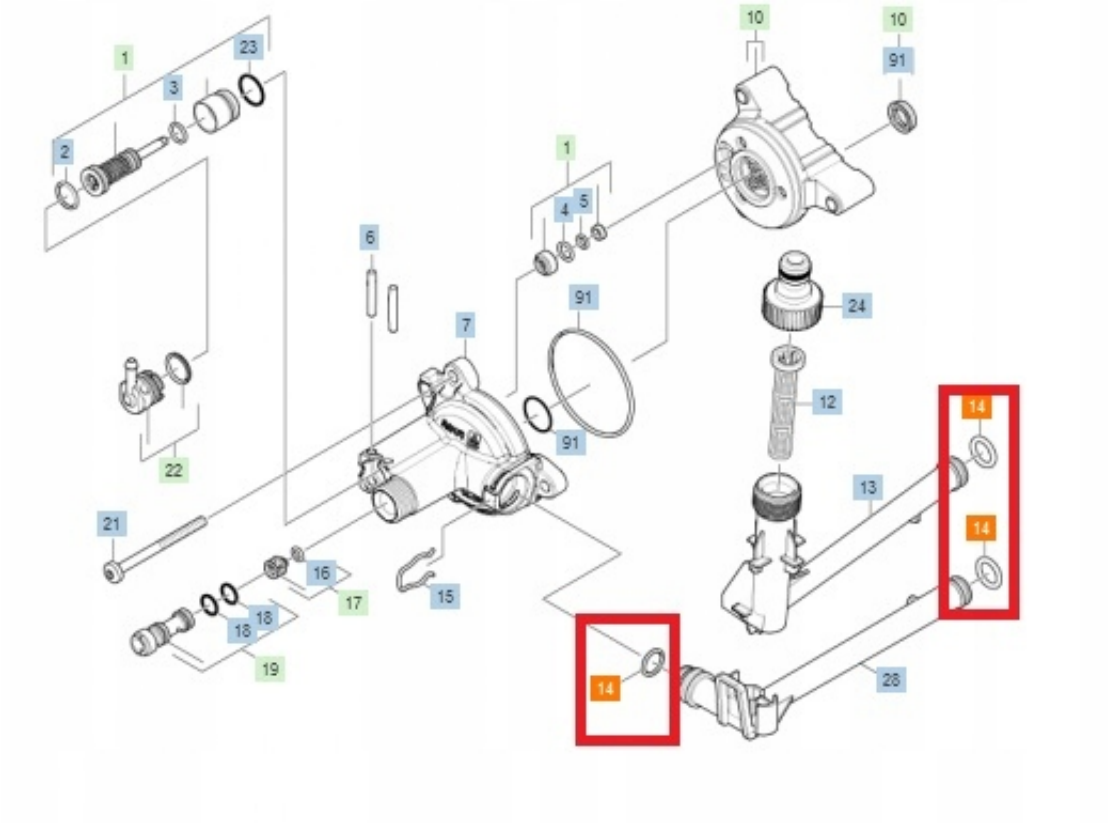

K 5.85M *EU

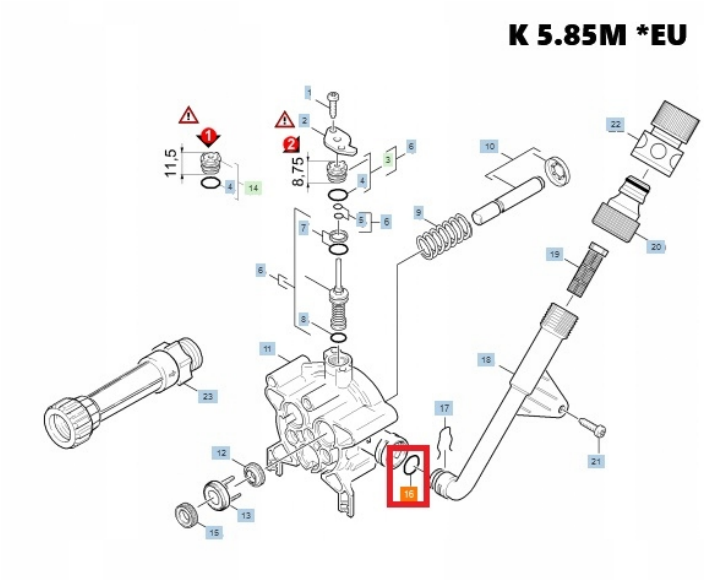

K 6.91 MD *EU

