Dane aktualne na dzień: 28-11-2026 15:13

Link do produktu: https://www.iba24.pl/tlok-sterujacy-karcher-2885-3970-k2-k3-p-474.html

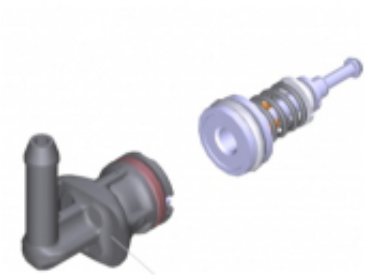

# Tłok sterujący Karcher 2.885-397.0 K2 K3,

| | |
|---|---|
| Cena | **192,00 zł** |
| Numer katalogowy | **2.885-397.0** |
| Kod producenta | **2.885-397.0** |
| Kod EAN | **4039784974258** |
| Marka | **Kärcher** |
| Waga produktu z opakowaniem jednostkowym | **0.007** |
| Napięcie zasilania | **230** |
| Rodzaj pompy | **kompozytowa** |
| EAN (GTIN) | **4039784974258** |
| Model | **K2 K3** |
| Maksymalna moc | **1400** |
| Ciśnienie robocze | **110** |
| Kod producenta | **2.885-397.0** |

## Opis produktu

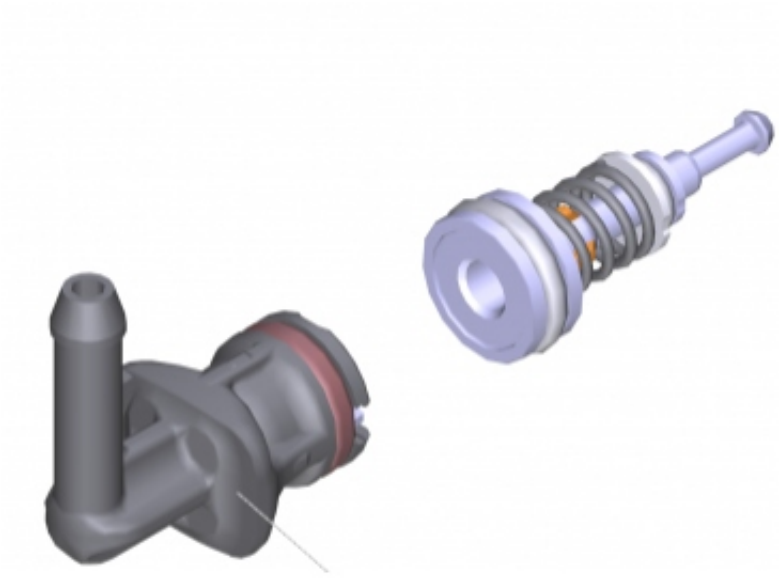

Pasuje do maszyn o nr katalogowy:

1.117-200.0

1.117-220.0

1.117-221.0

1.117-222.0

1.117-223.0

1.599-260.0

1.599-261.0

1.599-262.0

1.599-263.0

1.599-264.0

1.599-265.0

1.601-020.0

1.601-657.0

1.601-658.0

1.601-659.0

1.601-810.0

1.601-811.0

1.601-812.0

1.601-813.0

1.601-814.0

1.601-815.0

1.601-816.0

1.601-817.0

1.601-818.0

1.601-819.0

1.601-820.0

1.601-821.0

1.601-822.0

1.601-823.0

1.601-824.0

1.601-825.0

1.601-826.0

1.601-827.0

1.601-829.0

1.601-830.0

1.601-831.0

1.601-832.0

1.601-833.0

1.601-834.0

1.601-835.0

1.601-836.0

1.601-837.0

1.601-838.0

1.601-839.0

1.601-881.0

1.601-882.0

1.601-883.0

1.601-885.0

1.601-886.0

1.601-887.0

1.601-888.0

1.601-889.0

1.602-104.0

1.602-105.0

1.602-106.0

1.602-107.0

1.602-110.0

1.602-111.0

1.602-112.0

1.602-113.0

1.602-114.0

1.602-115.0

1.602-116.0

1.602-117.0

1.602-118.0

1.602-119.0

1.602-121.0

1.602-122.0

1.602-123.0

1.602-124.0

1.602-211.0

1.602-212.0

1.602-214.0

1.602-218.0

1.602-221.0

1.602-226.0

1.602-227.0

1.602-230.0

1.602-231.0

1.602-234.0

1.602-315.0

1.602-317.0

1.602-500.0

1.602-513.0

1.602-514.0

1.602-600.0

1.602-601.0

1.602-602.0

1.602-603.0

1.602-604.0

1.602-605.0

1.602-606.0

1.602-607.0

1.602-608.0

1.602-609.0

1.602-610.0

1.602-611.0

1.602-612.0

1.602-613.0

1.602-614.0

1.602-615.0

1.602-616.0

1.602-617.0

1.602-618.0

1.602-619.0

1.602-650.0

1.602-651.0

1.602-652.0

1.602-653.0

1.602-654.0

1.602-655.0

1.602-656.0

1.602-657.0

1.602-658.0

1.602-659.0

1.602-660.0

1.602-661.0

1.602-662.0

1.602-730.0

1.602-731.0

1.602-732.0

1.602-733.0

1.602-734.0

1.602-735.0

1.602-736.0

1.602-737.0

1.602-738.0

1.602-739.0

1.602-740.0

1.602-750.0

1.602-751.0

1.602-752.0

1.602-753.0

1.602-754.0

1.602-755.0

1.602-756.0

1.602-757.0

1.602-758.0

1.602-759.0

1.602-760.0

1.602-761.0

1.602-762.0

1.602-763.0

1.602-850.0

1.671-580.0

1.671-581.0

1.671-582.0

1.671-800.0

1.671-804.0

1.671-805.0

1.671-808.0

1.672-580.0

1.672-581.0

1.673-121.0

1.673-122.0

1.673-123.0

1.673-124.0

1.673-125.0

1.673-127.0

1.673-128.0

1.673-129.0

1.673-130.0

1.673-131.0

1.673-132.0

1.673-133.0

1.673-134.0

1.673-135.0

1.673-136.0

1.673-137.0

1.673-138.0

1.673-139.0

1.673-140.0

1.673-141.0

1.673-142.0

1.673-150.0

1.673-151.0

1.673-152.0

1.673-153.0

1.673-154.0

1.673-155.0

1.673-156.0

1.673-157.0

1.673-158.0

1.673-159.0

1.673-220.0

1.673-221.0

1.673-222.0

1.673-225.0

1.673-226.0

1.673-228.0

1.673-230.0

1.673-233.0

1.673-234.0

1.673-235.0

1.673-236.0

1.673-238.0

1.673-239.0

1.673-245.0

1.673-246.0

1.673-247.0

1.673-248.0

1.673-249.0

1.673-251.0

1.673-273.0

1.673-280.0

1.673-281.0

1.673-290.0

1.673-291.0

1.673-319.0

1.673-500.0

1.673-501.0

1.673-502.0

1.673-503.0

1.673-504.0

1.673-505.0

1.673-506.0

1.673-507.0

1.673-508.0

1.673-509.0

1.673-510.0

1.673-511.0

1.673-512.0

1.673-513.0

1.673-514.0

1.673-520.0

1.673-522.0

1.673-999.0

1.676-000.0

1.676-001.0

1.676-002.0

1.676-003.0

1.676-004.0

1.676-006.0

1.676-007.0

1.676-008.0

1.676-009.0

1.676-010.0

1.676-011.0

1.676-012.0

1.676-013.0

1.676-014.0

1.676-020.0

1.676-021.0

1.676-022.0

1.676-023.0

1.676-024.0

1.676-025.0

1.676-026.0

1.676-027.0

1.676-028.0

1.676-029.0

1.676-100.0

1.676-101.0

1.676-102.0

1.676-103.0

1.676-104.0

1.676-105.0

1.676-106.0

1.676-107.0

1.676-108.0

1.676-109.0

1.676-110.0

1.676-200.0

1.676-201.0

1.676-202.0

1.676-203.0

1.676-204.0

1.676-205.0

1.676-206.0

1.676-207.0

1.676-208.0

1.676-350.0

1.676-351.0

1.676-353.0

1.676-354.0

1.676-355.0

1.676-356.0

1.676-370.0

1.676-371.0

1.676-372.0

1.676-373.0

1.679-151.0

1.679-300.0

1.679-301.0

1.679-302.0

1.679-303.0

1.679-304.0

1.679-305.0

1.679-310.0

1.679-315.0

1.679-316.0

1.679-400.0

1.679-401.0

1.679-402.0

1.679-403.0

1.679-404.0

1.679-405.0

1.679-406.0